COPYRIGHT ©2006 ALL RIGHTS RESERVED
BY MILESTONE STUDIO
NOT TO BE COPIED OR REPRODUCED
WITHOUT WRITTEN PERMISSION

LOT 114, 12 BRIDGES

JOB #	#782-B
SCALE	1/4"= 1'-0"

DATE
9-21-05 ACC SET #1
2-15-06 PC SET
6-1-06 Owner Rev-Eng
8-23-06 Owner rev

FRONT ELEVATION

16/12 PITCH
FOAM DETAIL EAVE (STUCCO)

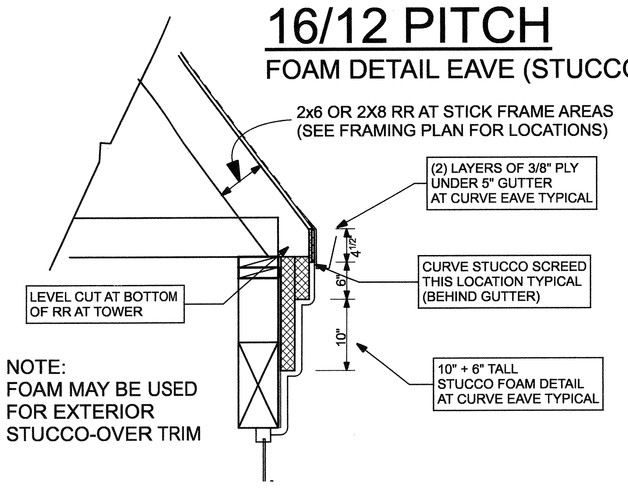

TOWER EAVE DETAIL
1"= 1'-0" 20/12 pitch - STICK ROOF OPTION REV 8-22-06 (2/4)

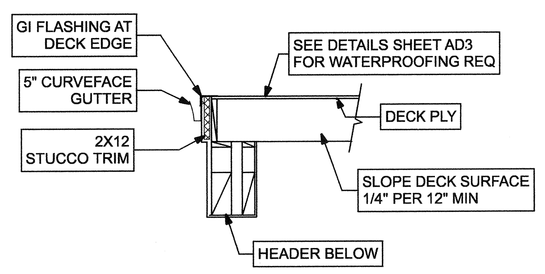

DECK EDGE DETAIL
TYPICAL ALL DECKS 5-11-06 (B)

12/12 PITCH
12" EAVE (10" TAIL + 2x FACIA)

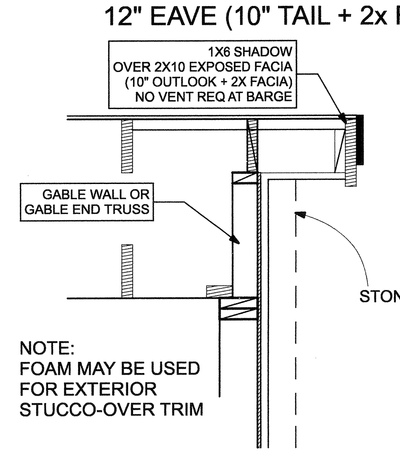

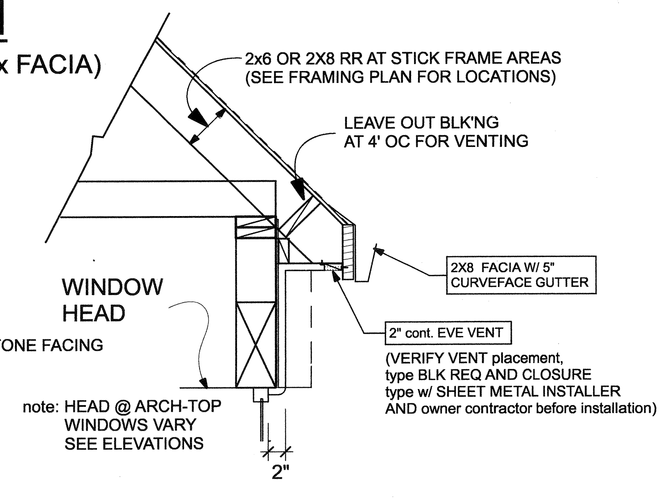

EAVE DETAIL (AT BOTH EAVE AND BARGE)
12/12 pitch - STICK ROOF REV 8-22-06 1"= 1'-0" (1/4)

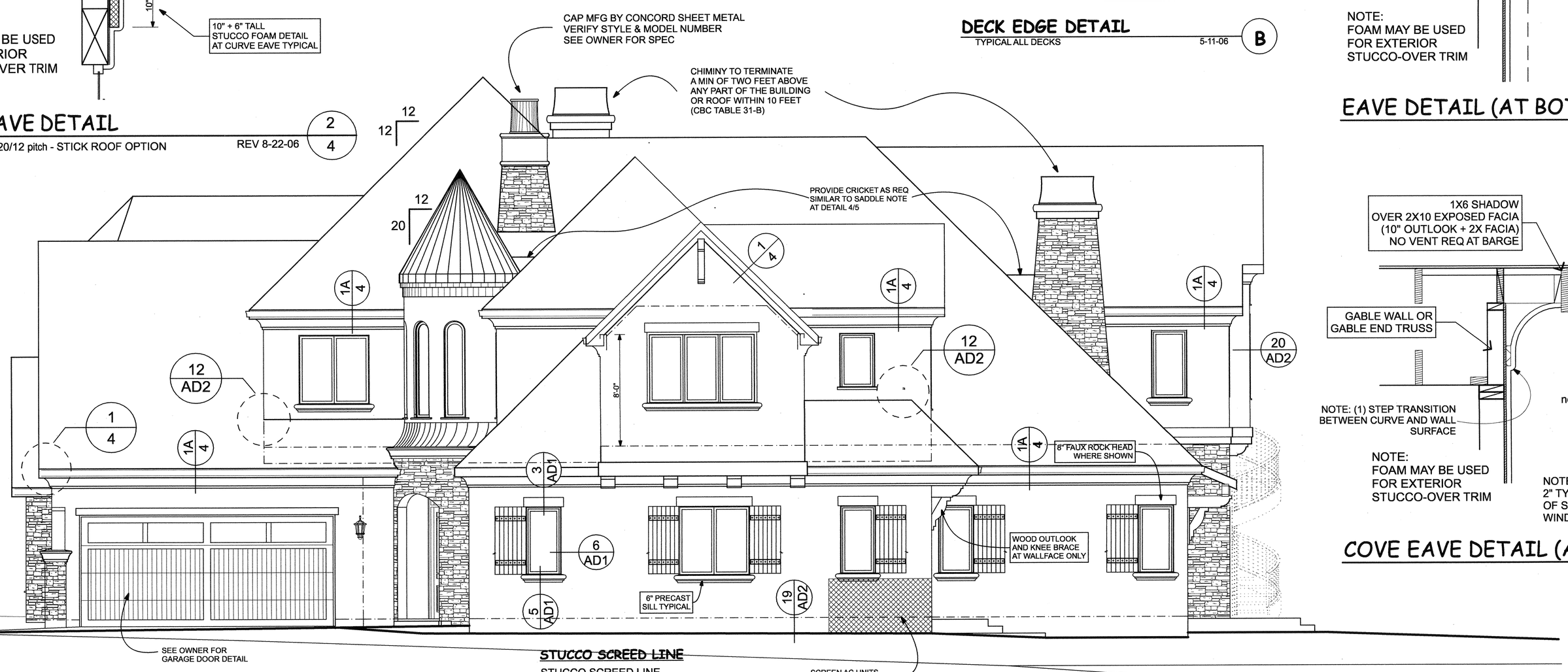

STUCCO SCREED LINE
STUCCO SCREED LINE
TO PARALLEL GRADE
WITHIN 6" (NOT STEPPED)

RIGHT SIDE ELEVATION

12/12 PITCH
14" EAVE (12" TAIL + 2x FACIA)

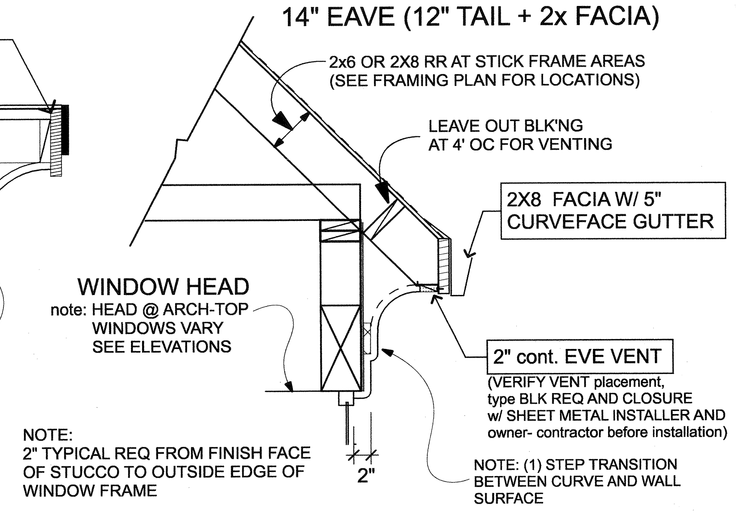

COVE EAVE DETAIL (AT BOTH EAVE AND BARGE)
12/12 pitch - STICK ROOF REV 8-22-06 1"= 1'-0" (1A/4)

PLEASE NOTE:
THIS IS AN ARCHITECTURAL DETAIL
VERIFY!! WITH SHEETMETAL INSTALLER AS
TO VENT TYPE USED AND INSTALLATION REQ

ELEVATIONS

10 5 3 2 1

Milestone Studio
A Tradition in Home Design Quality
2905 CLEMSON DRIVE
CAMERON PARK, CA 95682
OFFICE - FAX (530) 676-0900
email - info@milestonestudio.com

Hegseth Development
7803 MADISON AVE., SUITE 700
CITRUS HEIGHTS, CA. 95610
OFFICE (916) 942-7325
FAX (916)996-9822
EMAIL matthewwestes@hegsethdevelopment.com

Hegseth Development
ELEVATIONS

SHEET 4 OF SHEETS