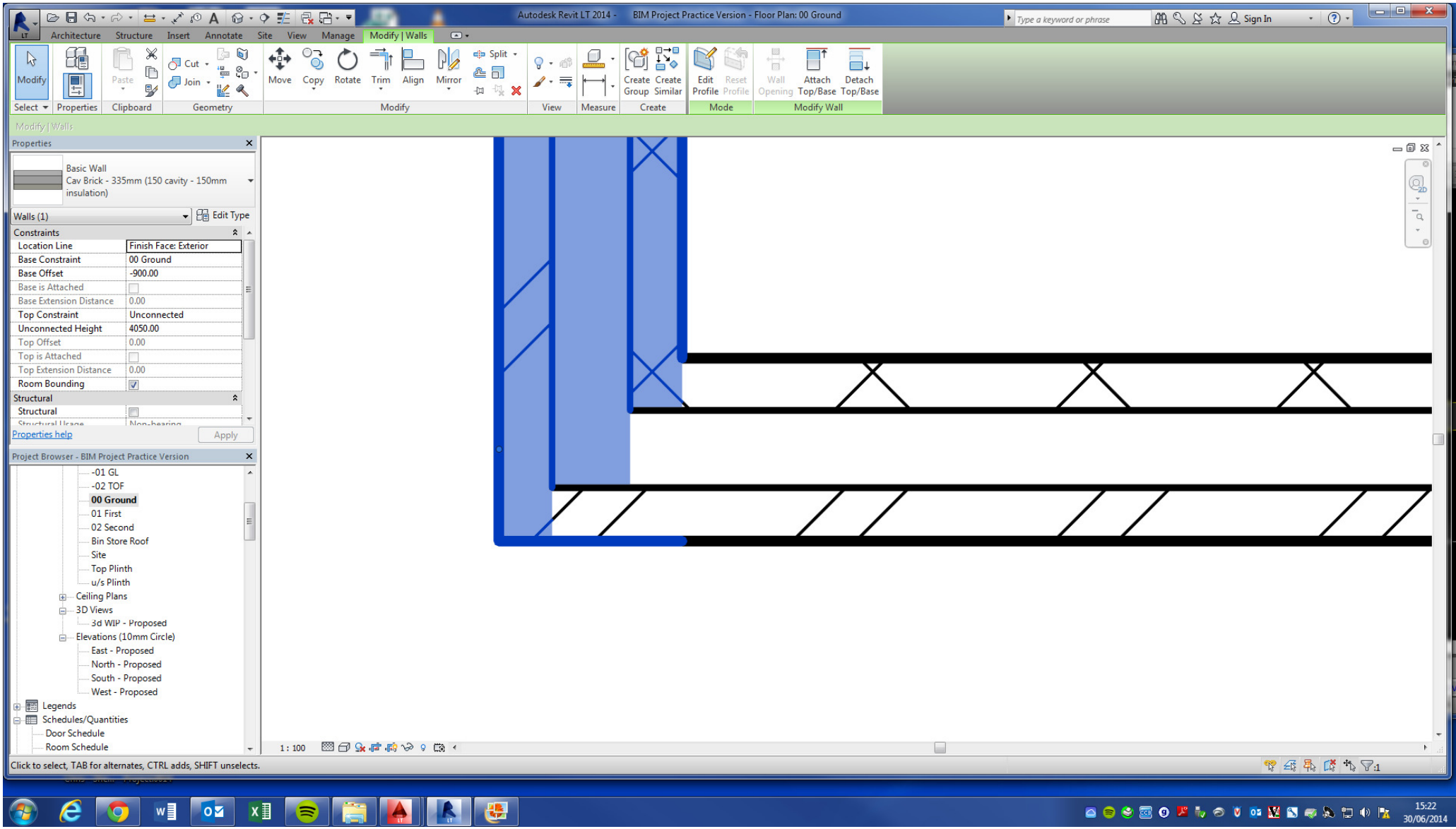
Autodesk Revit LT 2014 - BIM Project Practice Version - Floor Plan: 00 Ground
Architecture
Structure
Insert
Annotate
Site
View
Manage
Modify | Walls
Modify
Select
Properties
Paste
Clipboard
Cut
Join
Geometry
Move
Copy
Rotate
Trim
Align
Mirror
Split
Modify
View
Measure
Create Group
Create Similar
Create
Edit Profile
Reset Profile
Mode
Wall Opening
Attach Top/Base
Detach Top/Base
Modify Wall
Properties
Basic Wall
Cav Brick - 335mm (150 cavity - 150mm insulation)
Walls (1)
Edit Type
Constraints
Location Line
Finish Face: Exterior
Base Constraint
00 Ground
Base Offset
-900.00
Base is Attached
Base Extension Distance
0.00
Top Constraint
Unconnected
Unconnected Height
4050.00
Top Offset
0.00
Top is Attached
Top Extension Distance
0.00
Room Bounding
Structural
Structural
Properties help
Apply
Project Browser - BIM Project Practice Version
-01 GL
-02 TOF
00 Ground
01 First
02 Second
Bin Store Roof
Site
Top Plinth
u/s Plinth
Ceiling Plans
3D Views
3d WIP - Proposed
Elevations (10mm Circle)
East - Proposed
North - Proposed
South - Proposed
West - Proposed
Legends
Schedules/Quantities
Door Schedule
Room Schedule
1 : 100
Click to select, TAB for alternates, CTRL adds, SHIFT unselects.
15:22
30/06/2014